ENGLISH INDEX

Architectural Light

City COLOR 400

PATENT PENDING

⚠ WARNING

SAFETY INFORMATION

READ ALL CAUTIONS AND WARNINGS PRIOR TO OPERATE THIS EQUIPMENT.
INSTRUCTION TO PREVENT INJURY OR DAMAGE DUE TO ELECTRIC SHOCK, FIRE, MECHANICAL HAZARDS AND UV RADIATION HAZARDS.

• PROTECTION AGAINTS FIRE
1) This equipment is designed for use with the following lamp only: CDM-SA/T 150W/942 (PHILIPS)
DO NOT USE ANY OTHER TYPE LAMP!
2) Maintain minimum distance of 0.5 meter from walls or any other type flammable surfaces.
3) Maintain minimum distance to lighted objects of 5.0 meter.
4) Replace fuses only with the specified type and rating.
5) Do not install the spot close to heat sources. Do not lay the connection cable on the spot when it is warm.
• PROTECTION AGAINST ELECTRIC SHOCK
1) This equipment must be earthed.
2) Class I equipment. The power supply cord includes a protective earthing conductor as part of the cord.
3) For connection to the supply mains proceed as pict.2 page 4. The equipment must be connected to branch circuit having a circuit- breacker In=16A Id=0.03A (230VAC)
4) Disconnect power before lamp's replacement or servicing (service personnel).
• PROTECTION AGAINST MECHANICAL HAZARDS
1) Use secondary safety chain when fixing this equipment.
2) Hot lamp explosion hazard. Do not open the equipment for 300 seconds after switching off.
3) Equipment surface may reach temperature up to 100°C. Allow about five minutes before handling.
4) Replace the lamp if it is damaged or thermally deformed.
• PROTECTION AGAINST UV RADIATION HAZARDS
1) Do not start on this equipment without lamp enclosure or if the protection screens, or ultraviolets screens are damaged.
2) The protection screens, the lenses, or the ultraviolet filters must be replaced if they are visibly damaged and their effectiveness has been reduced, for example, by cracks or deep scratches.
3) Do not look directly at the lamp while lamp is on.

INTRODUCTION

Thank you for choosing our CityColor400:
The fixture projects, thanks to an extremely efficient optic system (PATENT PENDING), a powerful light beam which can create numberless color shades. Its performances, in terms of luminousity and lighted surfaces, can reach incredible levels.

The CityColor400 comes in unique version:

• Art. 0302 CITYCOLOR400 for two CDM-T 150W discharge lamps

The fixture can work in automatic mode or in synchro mode, otherwise may be controlled by 8 bit DMX controllers

The input protocol is the DMX 512. To drive the fixture we suggest to use either our Control Show 512, Fancy or the Easy Control.

To make the most of its possibilites and for a correct functioning of this unit in the years to come, we suggest you to read carefully this manual before connecting or putting the spot into use. By doing so you will gain experience with its commands and connections and you will be easily able to use it.

YOUR REFERENCE

Always remember to give the serial number and to specify the model any time you address the seller for information or assistance.

BASIC KIT

The basic kit of the CityColor400 flood projector consist of:

- Projector
- User's manual
- Studio Due warranty
- Lamps (upon request)

⚠ WARNING

Check that the spot has not been damaged during transport. If it has been damaged or it does not work, address the seller. Whether the spot has been shipped to you directly, please contact the shipping company. Only the consignee (person or company) can claim for these damages.

TECHNICAL FEATURES (CITYCOLOR 400 discharge lamp • art. 0302)

• LAMP

2x MasterColour	CDM-SA/T 150W/942 (PHILIPS)
Color temperature:	4.200 °K
Average lamp life:	6.000 hours
Luminous flux:	2 x 14.000 lm
Burning position:	Universal

• OPTIC COLOUR SYSTEM
Full CYM color mixing,unlimited variety of colours and shades
High resolution stepper motors

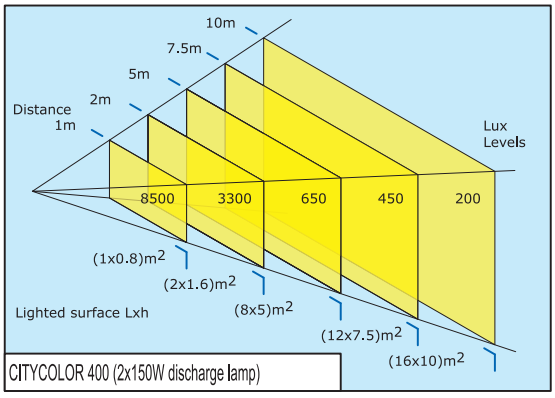

• DIMMER
0-100% continuously variable (256 steps)

• BEAM ANGLE
Beam angle (50%):45 °

• IP RATE
IP 66

• CONTROL INPUT
Standard interface: RS-485;opto-couplet input
Protocol:USITT DMX 512

• AUTOMODE
Stand-alone control: auto mode function master/slave (synchro mode) with 27 programs

• POWER SUPPLY
Rated voltage: 200-208-230-240; 50Hz. On request: 60Hz
Rated power: 500Va
Rated current: 2,2A (230V)

• POWER FACTOR CORRECTOR
built-in cos Ø 0.9

• FUSES
Lamp fuse: 5.0A/250V (delay time)
Electronic fuse: 2.0A/250V (delay time)

• DIMENSION (WxDxH)
mm 510x490x720

• WEIGHT
Kgs. 31,0

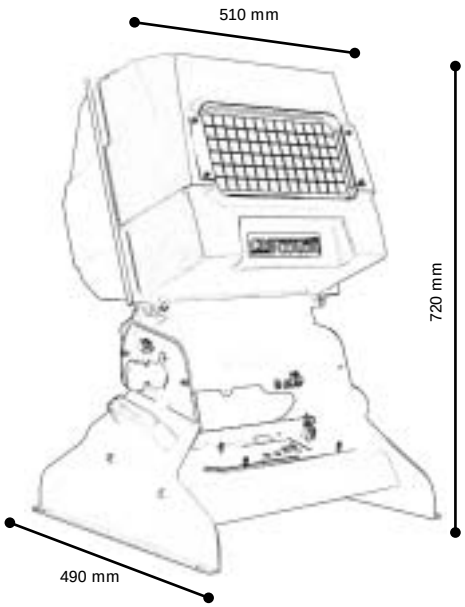

BEFORE USING

⚠ WARNING

The equipment must be earthed.
IP 66 rate: to ensure the declared IP rate choose the correct size of the cables (DMX cables: size form 3 to 6.5 mm - Main Power cables: size from 6 to 12 mm).
All the gaskets and the glass must be keeped in full working order.
If the fixture is not connected with DMX cables DON'T REMOVE the green protection.

Read all cautions and warnings to page 1 prior to install this equipment. Particularly, read the follow:

1) Disconnect power before lamp's replacement or servicing (service personnel)
2) Do not open the lamp cover for 300 seconds after switching off
3) Wear gloves and goggles to re-lamping or to work inside the unit (service personnel)
4) The equipment must be connected to branch circuit having a circuit-breacker In=16A • Id=0.03A (230VAC)
5) Make sure that the main voltage and frequency correspond to rated values on the data label, pict.1.
   If is necessary set-up the red connector to the right position, pict.1a/1b

Before any operation on the fixture

a) Do not install the spot close to the heat sources. Do not lay the connection cable on the spot when it is warm.
b) This unit must be positioned as to allow its ventilation.
c) The unit must be positioned at least 1 m from walls or other flammable surfaces and minimum 5 meters to lighted objects.

   -External surface temperature Ta 45°C:
   • After 5 minutes work; Tc=75°C.
   • Once the thermic balance has been obtained; Tc=100°C.

d) Replace the lamp when is exhausted (6000 h) to avoid bad peformances of the fixture or that the optic system is damaged by the lamp explosion. It must be replaced if it has been damaged or thermally deformed
e) The protection screens, the lenses, or the ultraviolet filters must be replaced if they are visibly damaged and their effectiveness has been reduced, for example, by cracks or deep scratches.
f) In case of installation of the spot to a truss, check carefully that the fixture is fixed with a chain to both truss and unit.
g) Do not handle the spot by taking it by the head, but always by using the handles.

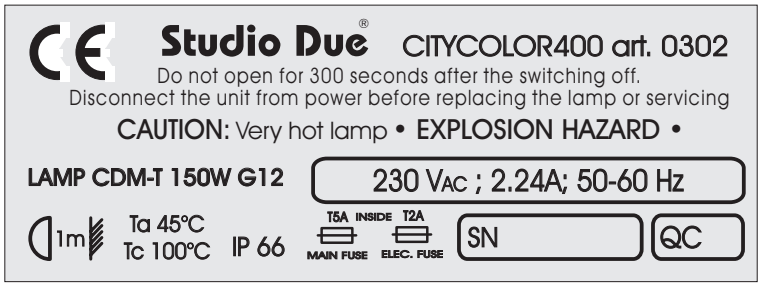

pict.1

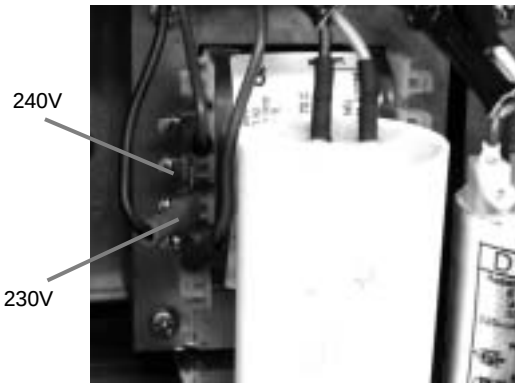

pict.1a

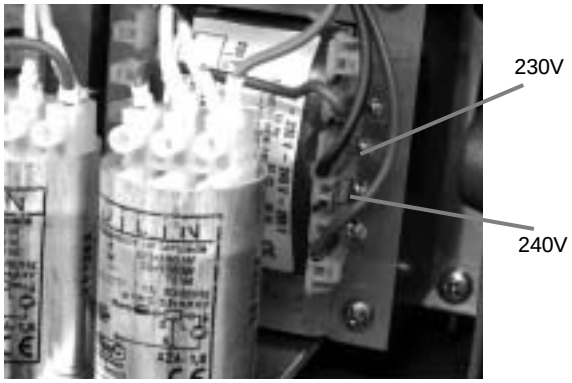

pict.1b

MAIN POWER AND DMX CONNECTION

1) Disconnect power before lamp's replacement or servicing (service personnel)
1) Open the rear box cover.

• The fixture can be equipped for 200/208/230/240Vac, 50Hz main voltage (pict.1a/1b). On request 60Hz.

3) Insert the main power cable into the PG (pic.3), connect the cable to the main power connector (pic2) and tighten the PG.
3) If necessary (synchro-mode), insert the the DMX cables into the PG (pic.3), connect the cables to the DMX connector (pic2) and tighten the PG.
4) Close the box cover with care, pict.3.

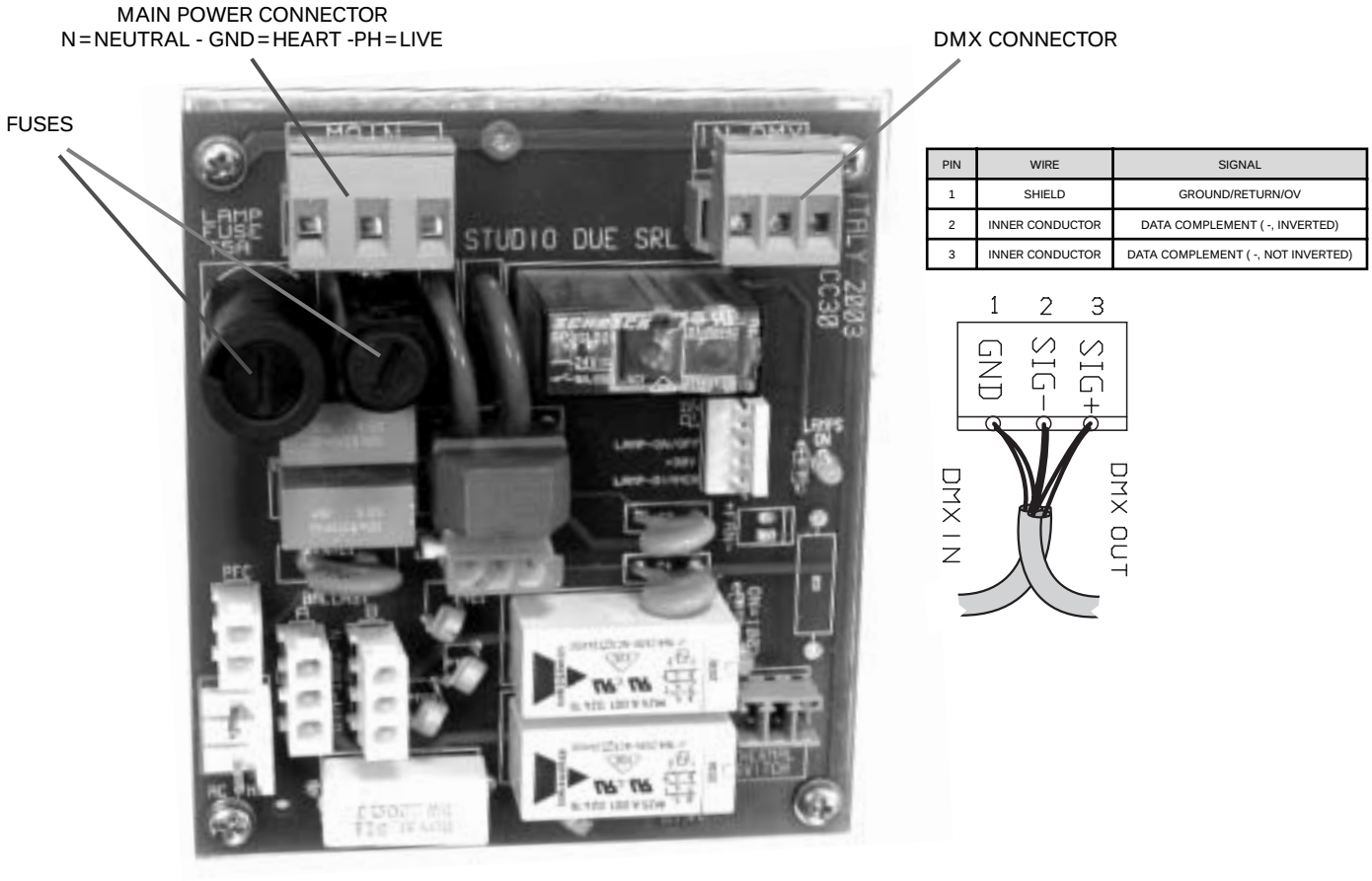

PIN	WIRE	SIGNAL
1	SHIELD	GROUND/RETURN/OV
2	INNER CONDUCTOR	DATA COMPLEMENT (-, INVERTED)
3	INNER CONDUCTOR	DATA COMPLEMENT (-, NOT INVERTED)

pict.2

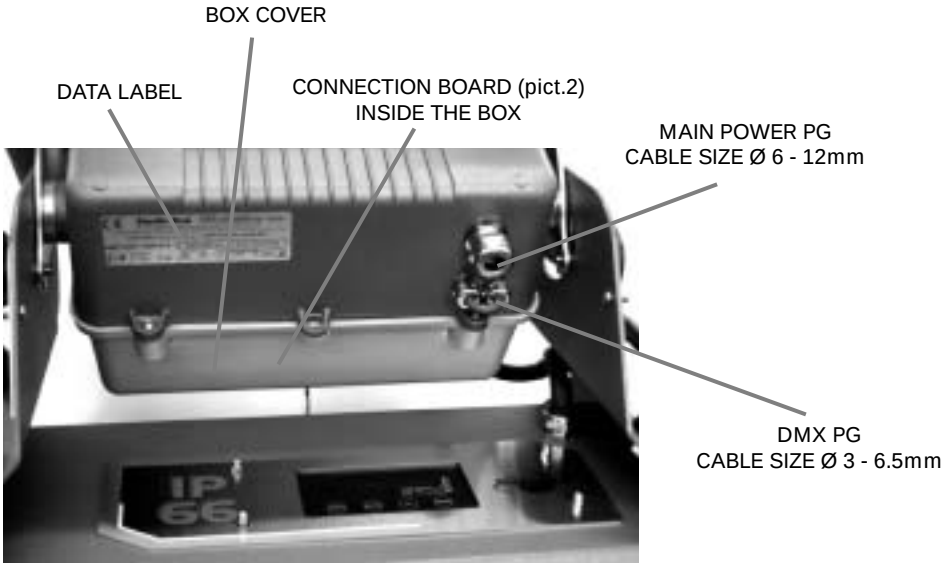

pict.3

LAMP'S INSTALLATION OR REPLACEMENT

1) Disconnect power before lamp's replacement. Wear gloves and goggles.
2) Tighten the two pommels (P) and lock the fixture's head as shown in pict.4
3) Unscrews the 4 screws (A) and remove the head cover, pict.4
4) Remove the nuts (S) to the dichroic group and open it with care, pict.5
5) Unscrews the screws (S1) and remove the two lateral reflectors (C1), pict.6
6) Insert the lamp into the lampholder (D) and repeat this procedure for the other lamp, pict.7
   Do not touch the quarz bulb with fingers. If this happenes, clean the bulb before use with dry cloth and alcohol.
7) Replace the two lateral reflectors (C1) and fix it with screws (S1)
8) Close the dichroic group with the nuts (S)
9) Put in again the head cover and screw the 4 screws (A) tightly.

⚠ WARNING

In case of replacement of the lamp or maintenance, do not open the fixture unless 5 minutes have passed from the switching off. This operation has to be done when the apparatus is disconnected from the mains supply

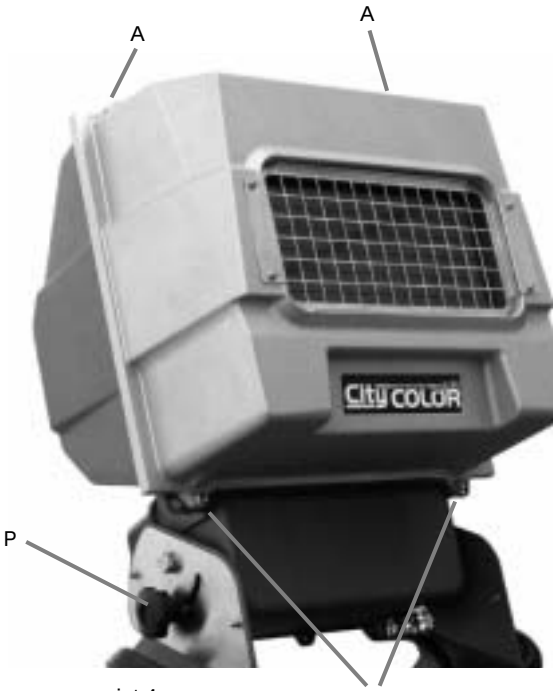

pict.4

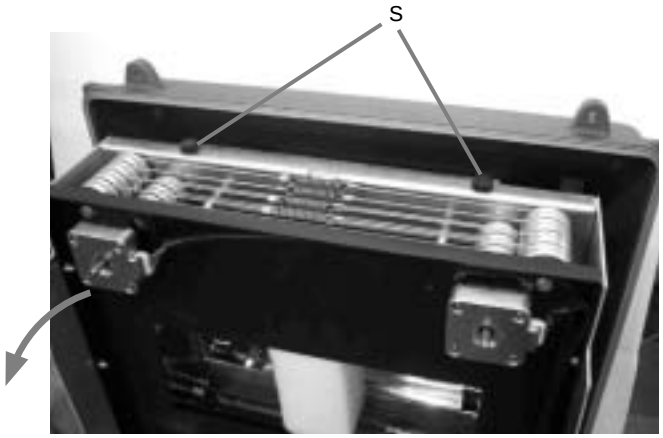

pict.5

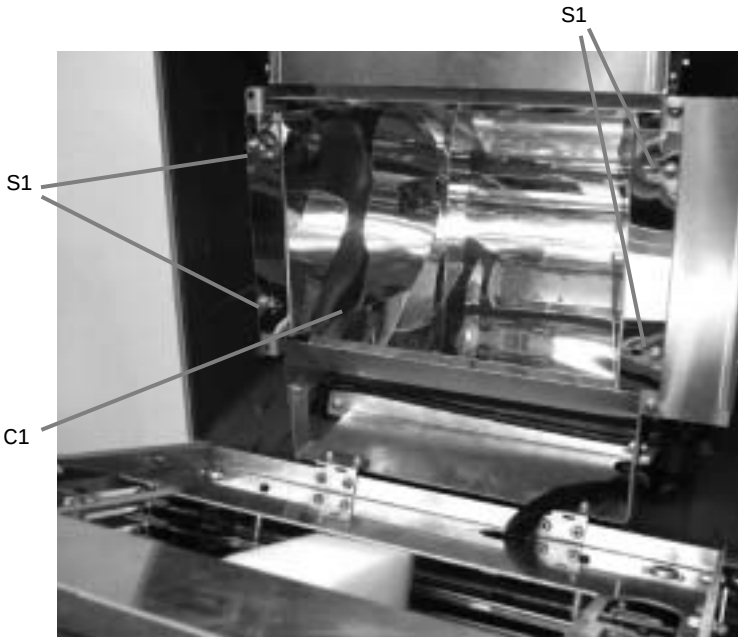

pict.6

pict.7

CONTROL PANEL

On the control panel of the CityColor (pict.8) you can find, besides the display, the leds and the buttons to use to set the spot.

LED

• “DMX” led	flashing:	DMX input present
	off:	no DMX input
• ”LAMP” led	flashing:	the lamp switching off is remotely controlled
	off:	lamp switched on
• ”DIMMER” led	flashing:	the lamp is 33% dimmered
	off:	lamp switched on

BUTTONS

Four buttons are used to programme the spot:

- MENU — to select the programming options
- DOWN — to go backward in the selected options
- UP — to go forward in the selected options
- ENTER — to confirm the selected options

DISPLAY

Shows the various menus and the selected options.

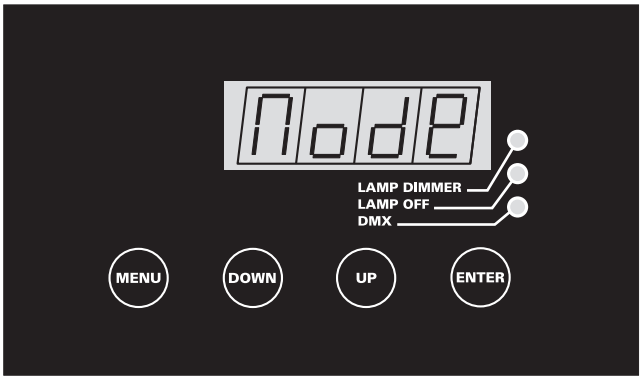

pict.8

SUMMARY OF THE PROGRAMMING FUNCTIONS OF THE CITYCOLOR

Addr

LHrs

NChn

FLIP

Mode

FHrs

Test

Rset

About twenty seconds after the switching on, the number of the software version will be shown on the display in “X_00” format. Afterwards the first of the eight available menus will appear:

Addr	to assign the DMX-512 address
Mode	DMX512 mode, master with pre-set selection, slave
LHrS	lamp working hours
FHrS	fixture total working hours
nChn	channels number
teSt	auto-test
FLIP	display inversion
rSEt	reset of the spot

To select any of the given options, press the MENU button up to when the required one is shown.

Addr (Address)

To visualise the DMX address press ENTER.
To modify the address press Down and Up buttons and, once the required address has been selected, press and keep ENTER pressed up to when the display stops flashing (it flashes to indicate that the selected option is different from the pre-set one). To go back to the options without making any change, press the MENU button.

Mode (Mode)

To visualise this mode press ENTER.
Use Down and Up buttons to change the mode and, once the required one has been selected, press and keep ENTER pressed up to when the display stops flashing (it flashes to indicate that the selected option is different from the pre-set one). The available options are: no (normal) for the functioning in DMX reception; Pr01…Pr15 (pre-set 01…15) for the master functioning with the respective game, SL (slave) for the functioning as slave. To go back to the options without any change, press the MENU button.

LHrS (Lamp Hours)
To visualise the number of working hours of lamp press ENTER.
The maximum countable number of hours is 3000. Exceeding this number, the display will show gr3t (greater than 3 thousands). To reset the counter press simultaneously buttons Down and UP: the display will show CLLH (clear lamp hours). To go back to the options without making any change, press the MENU button.

FHrS (Fixture hours)
To visualise the number of working hours of fixture press ENTER.
The maximum countable number of hours is 3000. Exceeding this number, the display will show gr3t (greater than 3 thousands). To reset the counter press simultaneously buttons Down and UP. A control of the memory will be run and all the default settings will be stored: the display will then show Init. If the memory is damaged, the display will show the message FAIL. To go back to the options without making any change, press the MENU button.

nChn (Number of Channel)
To visualise the number of channel press ENTER.
Use Down and Up buttons to change the channel and, once the required one has been selected, press and keep ENTER pressed up to when the display stops flashing (it flashes to indicate that the selected option is different from the pre-set one). It is possible to set 6 channels or 7 channels (remote reset and remote lamp switch off). To go back to the options without making any change, press the MENU button.

teSt (Autotest)
To insert the auto-test press ENTER and keep it pressed up to when the display shows the flashing message t-on (test on). To take off the auto-test press the MENU button. To go back to the options without making any change, press the MENU button.

FLIP (Display overturning)
The display visualisation can be standard or overturned: by pressing the ENTER button the two modes will be alternatively visible. The selected one will be immediately stored in the spot setting.
To go back to the options without making any change, press the MENU button.

rSEt (Reset)
To run the complete reset press ENTER and keep it pressed up to when the display shows the flashing message r-on (reset on). Once the reset procedure has been completed the spot will go back to the normal setting. To go back to the options without making any change, press the MENU button.

DRIVING THE CITYCOLOR WITH A DMX REMOTE CONTROLLER

- Select the requested DMX starting address by operating on the Addr option
- Select the requested number of channel with NChn option
- Connect the DMX signal between the fixture and the controller
- Check that the DMX led is flasing. (DMX signal present)
- If there is no signal, you must manually reset by operating on the RESET option

It is possible to choose a standard configuration occupying 6 DMX channels, or a enanched configurationoccupying 7 channels. Use the enanched configuration if you want to activate channel 7 which enables the reset of the motors and the switching off of the lamp from the controller.

6/7 CHANNELS MODE SELECTION

Press the MENU button on the control panel up to when the option nChn is shown on the display, select it by pressing ENTER and the set indication will appear (6 or 7 channels). If you want to activate channel 7 you must set 6 channels on the display. Pass through the numbers by pressing the buttons UP and DOWN: once you have set the required number, store it by pressing the ENTER button and keep it pressed up to when the display stops flashing (the flashing shows that the selected option is different from the one previously stored). To exit from the selected option without making any change press the MENU button.

Here below is shown the complete list of the functions of the fixture.
The complete list of the DMX values can be found to page 10

7 CHANNELS

CH 1= Speed
CH 2= Cyan
CH 3= Yellow
CH 4= Magenta
CH 5= Dimmer
CH 6= Basic colors+rainbow
CH 7= Reset/Lamp Off

6 CHANNELS

CH 1= Speed
CH 2= Cyan
CH 3= Yellow
CH 4= Magenta
CH 5= Dimmer
CH 6= Basic colors+rainbow

⚠ WARNING When using CYM color mixing, the basic colors channel # 6 must be set at: 00=DMX value

DMX TERMINAL LINE

⚠ WARNING

The wrong connection of the terminal line or its non-connection are probably the most frequent reasons for the defective functioning of the DMX line. The terminator is a resistor fitted between the two “data” lines (shown in pict.11) at the end of the cable furthest from the transmitter. The terminator resistor should have the same value as the impedance of the connection cable.
We supply a terminal with a 100 Ohm resistor.
It is recommanded that all DMX 512 systems have the termination resistor at the and of the line.

EXAMPLE 1
Connection controller-spot with 1 DMX 512 output

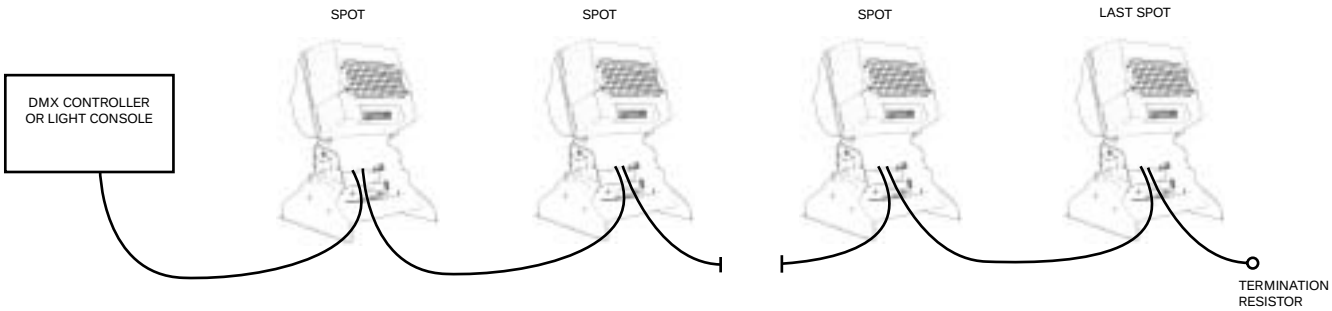

EXAMPLE 2
Connection controller-spot to one DMX 512 output over 150mts long

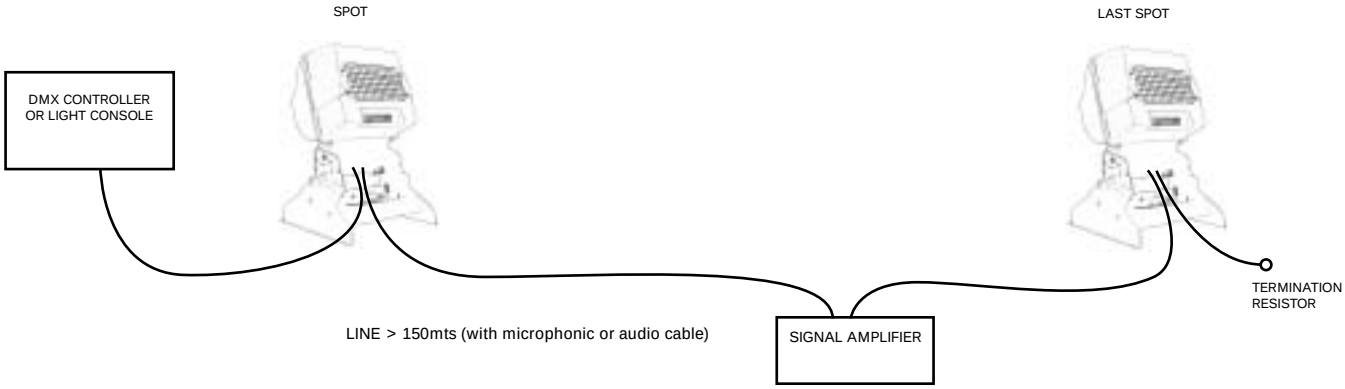

USE OF THE FIXTURE IN AUTO-MODE
A short list of the games can be found to page 11

Press the MENU button on the control panel up to when the option MODE (pict. 10) is shown on the display, select it by pressing ENTER and the set indication will appear (no...SL). Use Down and Up buttons to change the mode and, once the required one has been selected, press and keep ENTER pressed up to when the display stops flashing (it flashes to indicate that the selected option is different from the pre-set one). The available options are: no (normal) for the functioning in DMX reception; Pr01…Pr27 (pre-set 01…27) for the master functioning with the respective game, SL (slave) for the functioning as slave.
To go back to the options without any change, press the MENU button.

Mode	no	use of the CityColor in DMX-512
	Pr1..Pr27	master functioning with execution of the 27 stored programme
	SL	use of the CityColor in SLAVE MODE

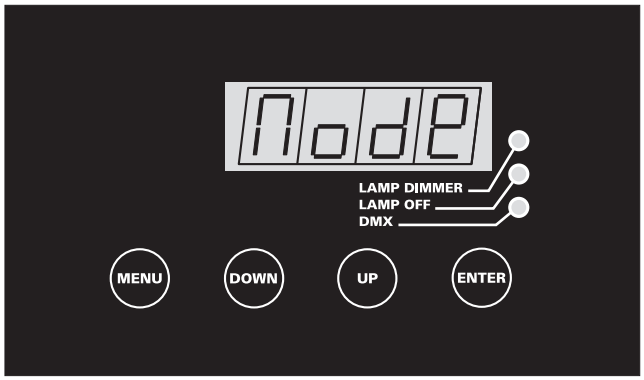

pict.10

SETUP AS MASTER

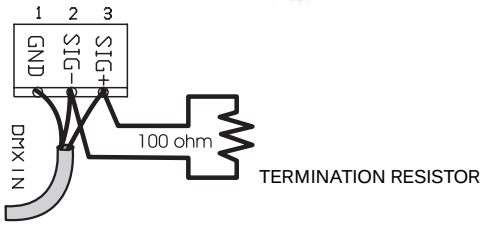

pict.11

EXAMPLE OF CONNECTION AND SETTING OF 4 FIXTURE IN SYNCHRO - MODE

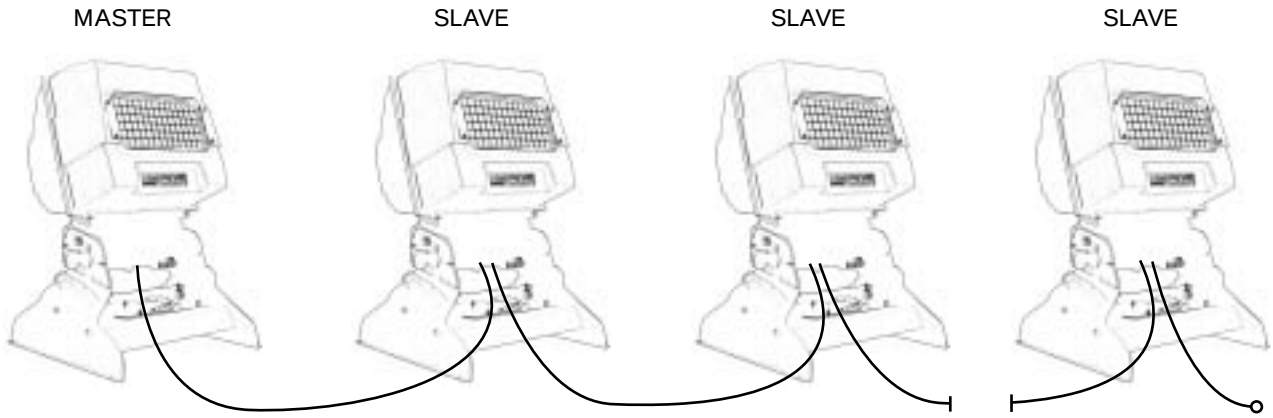

⚠ WARNING The cables are the same as the DMX standard cable

DMX CHANNEL ASSIGNMENT

Here below you can find the complete list of DMX values (ref. page 7)

DMX CHANNEL	FUNCTIONS	DESCRIPTION	DECIMAL	PERCENT
1	MOTOR SPEED	MOVEMENT SPEED Slow Mid 2 Mid 1 Fast	 0..63 64..127 128..191 192..255	 < 25% 25%..50% 50%..75% > 75%
2	CYAN	CONTINUOUSLY VARIABLE White Full color	 0 255	 0% 100%
3	YELLOW	CONTINUOUSLY VARIABLE White Full color	 0 255	 0% 100%
4	MAGENTA	CONTINUOUSLY VARIABLE White Full color	 0 255	 0% 100%
5	DIMMER	CONTINUOUSLY VARIABLE Closed Full open	 0 255	 0% 100%
6	BASIC COLORS/ RAINBOW	Color mixing Cyan Yellow Magenta Blue Red Green Color mix sequence (slow) Color mix sequence (mid) Color mix sequence (fast)	0..25 26..51 52..77 78..103 104..129 130..155 156..181 182..207 208..233 234..255	0..10% 10%..20% 20%..30% 30%..40% 40%..50% 50%..60% 60%..70% 70%..80% 80%..90% 90%..100%
7	REMOTE RESET/ LAMP-OFF (optional)	Normal Reset (delay) Normal Lamp-off (delay)	0..127 128..191 192..250 251..255	0..50% 50%..75% 75%..98% 98%..100%

GAMES TABLE

Here below you can find the complete list of the available games (ref. page 8)

PROGRAM	FUNCTIONS
01	Red Magenta Yellow –color mix sequence (slow – 30sec)
02	Red Magenta Yellow + White color mix sequence (slow – 30sec)
03	Green Cyan Yellow – color mix sequence (slow – 30sec)
04	Green Cyan Yellow + White color mix sequence (slow – 30sec)
05	Blue Cyan Magenta – color mix sequence (slow – 30sec)
06	Blue Cyan Magenta + White color mix sequence (slow – 30sec)
07	All colors – colr mix sequence (slow – 30sec)
08	All colors + White color mix sequence (slow – 30sec)
09	All colors – color mix sequence (mid – 20sec)
10	All colors + White color mix sequence (mid – 20sec)
11	All colors color mix sequence (fast – 10sec)
12	All colors + White mix sequence (fast – 10sec)
13	All colors + White mix sequence (fast – 10sec)
14	Basic colors (6 sec.)
15	Basic colors + White (6 sec.)
16	Wood (fix)
17	Magenta (fix)
18	Red (fix)
19	Light Red (fix)
20	Orange (fix)
21	Yellow (fix)
22	Cyan (fix)
23	Light Cyan (fix)
24	Green (fix)
25	Light Green (fix)
26	White (fix)
27	Ten colors + white (slow - 1 Minute)

N.	Description
1	Sleel grid
2	Aluminium cover
2/a	Adhesive
3	Tempered satin glass
4	Reflector (upper / lower)
5	Lateral unshaped reflector
6	Main reflector
7	Main reflector support (fan side)
8	Main reflector support
9	Upper Z plate
10	Lower Z plate
11	Nut
12	Lamp socket support
13	Lamp socket
14	Base/head cable complete
15	PG 7
16	PG 13
17	Thermal switch 100° NC
18	Thermal switch 110° NC
19	Support fan Z plate
20	Head fan
21	Aluminium cover gasket
22	Head
23	Main plate
24	Ballast support plate
25	Igniter
27	Condenser
28	Ballast
29	CC400 PC board support plate
30	CC400 PC board
31	Electronics cover gasket (head)
32	Electronics cover (head)
35	Bracket screw
36	Pommel
37	Handle
38	DX lateral bracket
39	DX lateral steel plate
40	SX lateral steel plate
41	Head stop spacer
42	DX head stop
42/a	SX head stop
43	Spacer
44	DMX control panel steel plate
45	DMX panel adhesive
46	Base plate
47	Display PC board
48	Motor PC board
48/a	DMX PC board support plate
49	Electronics cover gasket (base)
50	Electronics cover (base)
51	SX lateral bracket

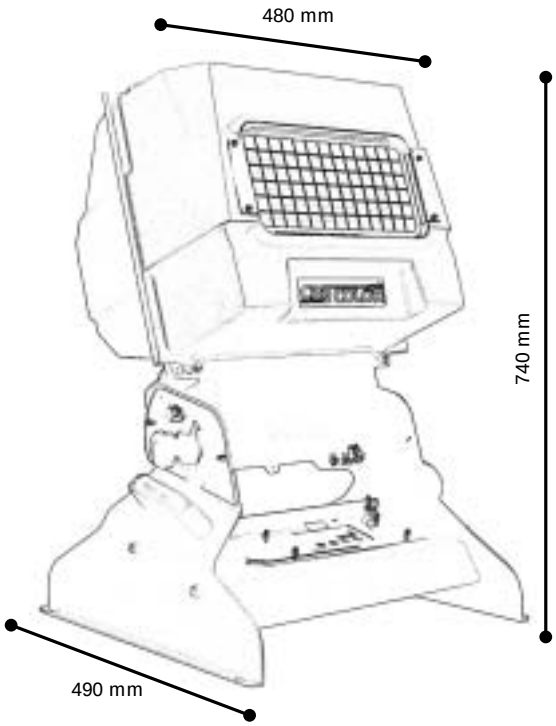

N.	Description
60	Rear motor panel
61	Spacer
62	Spacer protection
63	Hinge
64	Wire
65	Upper yellow color blade
66	Lower yellow color blade
67	Wire fixing plate
68	Wire fixing plate spacer
69	Teflon friction
70	Upper cyan color blade
71	Lower cyan color blade
72	Upper magenta color blade
73	Lower magenta color blade
74	Unshaped dimmer shutter blade
75	Shaped dimmer blade
76	Motor
77	Front color/motor panel
78	Connectors board protection
79	Dichroics guide plate
80	Motor connection board
92	Ball bearing support
93	Spacer
94	Pulley (wire fixing)
95	Spacer
96	Ball bearing H4
97	Pulley

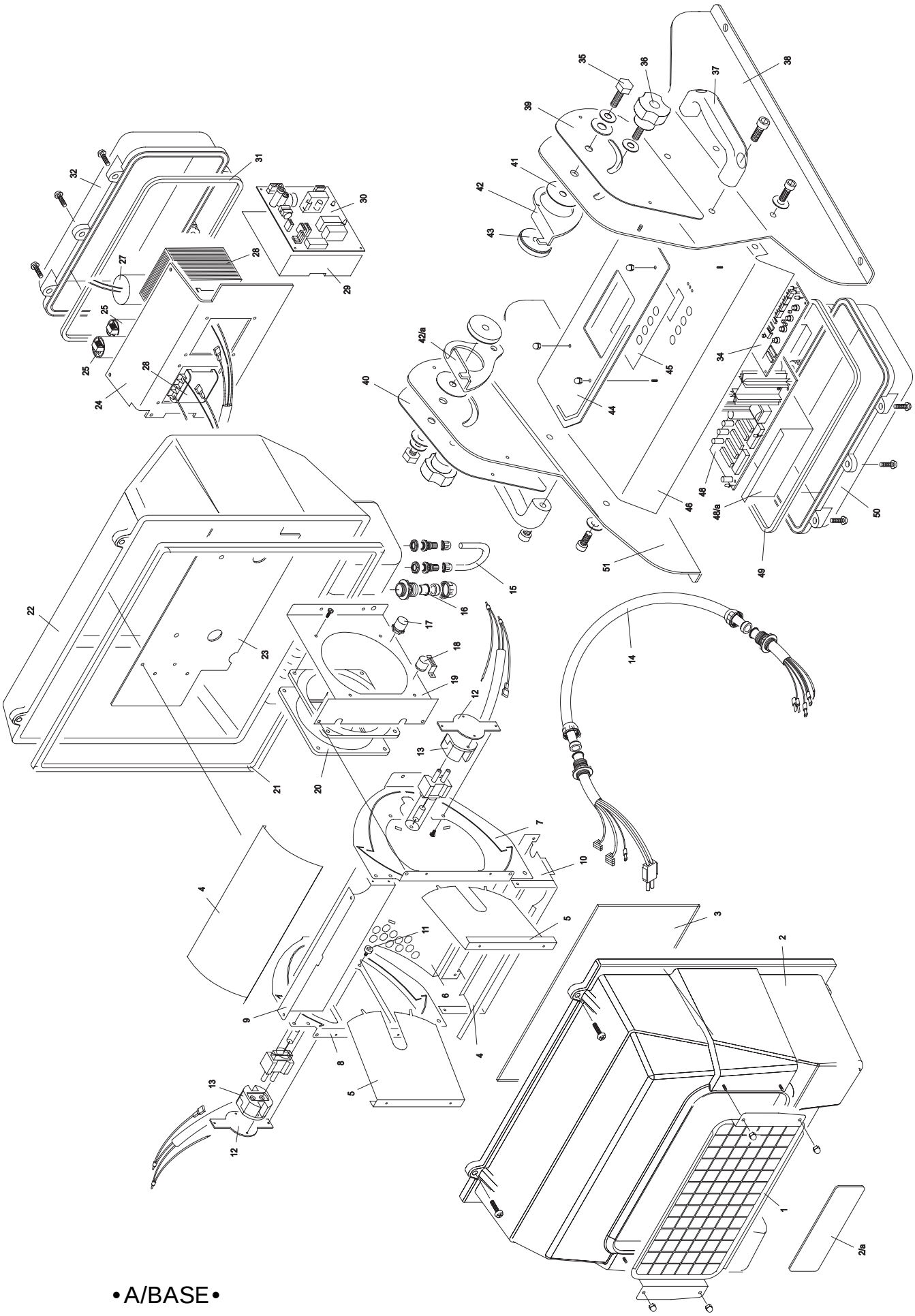
1
2
2/a
3
4
5
6
7
8
9
10
11
12
13
14
15
16
17
18
19
20
21
22
23
24
25
26
27
28
29
30
31
32
34
35
36
37
38
39
40
41
42
42/a
43
44
45
46
48
48/a
49
50
51

• A/BASE •

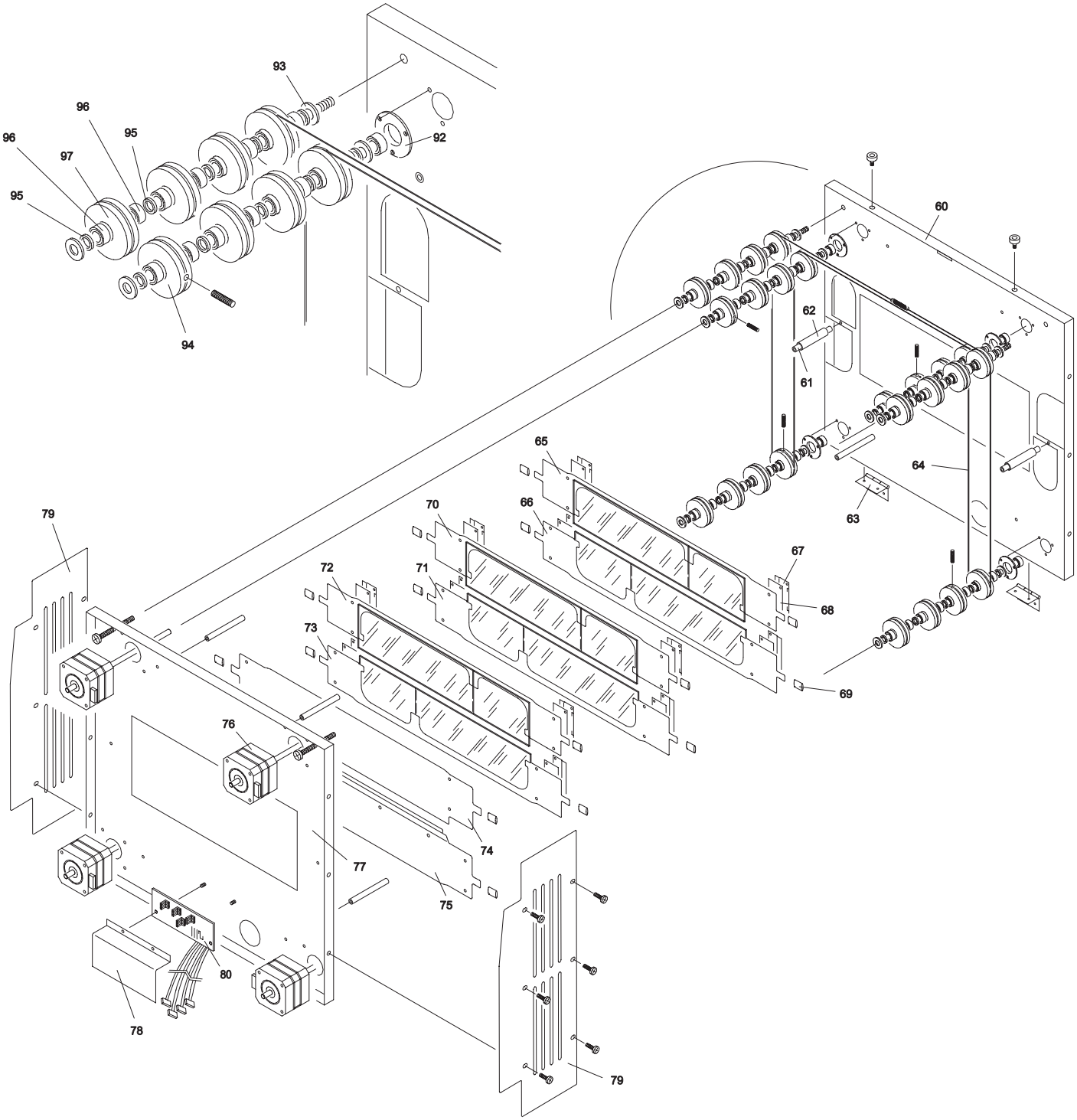
93
96
96
95
97
95
92
94
60
62
61
65
64
63
70
66
79
67
72
71
68
73
69
76
74
77
75
80
78
79

• B/HEAD •

MAIN BOARD CONNECTION

LED +5V OPTO DMX

U5 U6 U7 U8 U9 L6219 MOTOR DRIVER

U13 78M05
OPTO DMX

C65

U4 MICRO SLAVE MOTOR
CCSLAVEXX

U3 MICRO MASTER MOTOR
CC3DRVXX

U11 VIPER SWITCHING
POWER SUPPLY DRIVER

LED +5V

TO DISPLAY
PCB PAN IP

LED
320V DC

LED DMX
SIGNAL

MAIN POWER
INPUT
TO CC250

LED +28V

D3

MOT2
DIMMER

MOT3
MAGENTA

MOT4
YELLOW

U12
7805
+5V

TO PCB
CC250

VRI VARISTOR 275V
(OVERVOLTAGE PROTECTION)

MOT5
CYAN

D1 OFF LINE BRIDGE
RECTIFIER

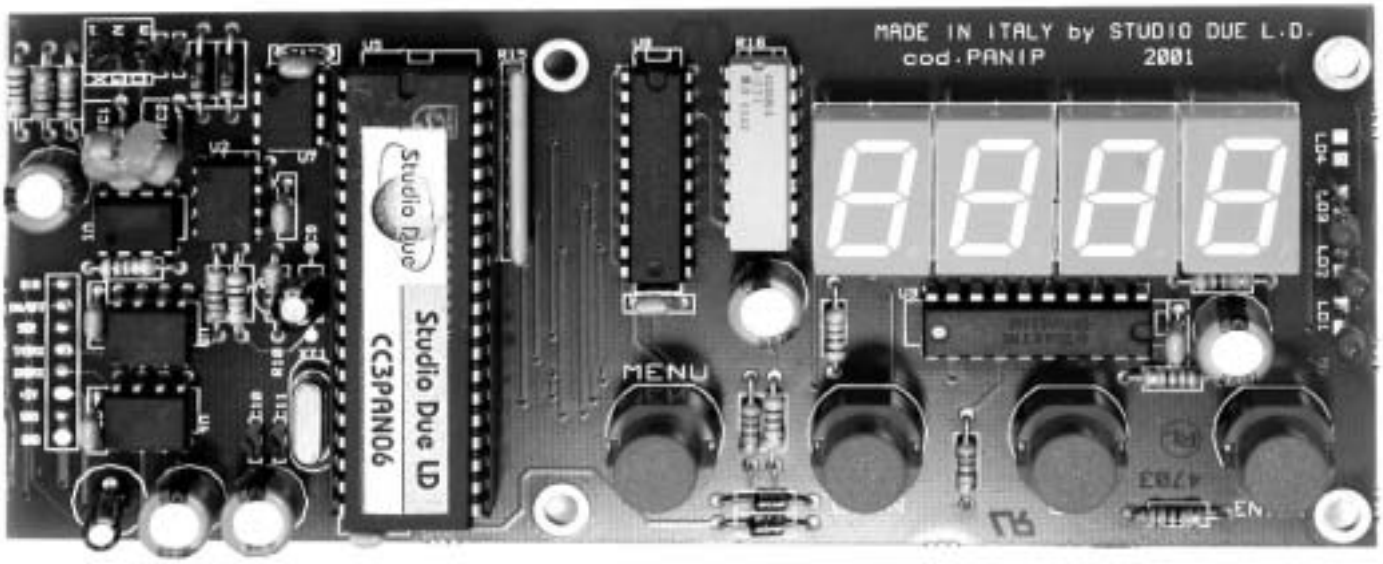

MOTORS BOARD

• POWER SUPPLY +30V Led On
• +5V Led
• +320V Led
• +5V DMX Led
• DMX signal
  Led flashing: the DMX signal is operating on the board
  Led off: check the U1 (6N137) and the DMX connecting cable (from PCB PAN IP)

• STEPPER MOTOR channel not working: (i.e. YELLOW):
1) Switch off the fixture and disconnect the YELLOW and CYAN cables
2) Connect the YELLOW cable on the CYAN connector
3) Switch on the fixture:
3a) If the YELLOW motor works normally it is necessary to replace the U6 (L6219)
3b) If the motor is still not working check with extreme attention the motor and the interconnecting circuits (cables and connectors). To check the cables and the motors you can measure the resistance as follows:
between PIN 1 and PIN21 (on IC U6)r = ~18ohm; between PIN 2 and PIN5 (on IC U6) r = ~18ohm

• If the led +5V OPTODMX is off:
1) Disconnect TO DISPLAY PCB PAN IP connector; if the led is on check PCB PAN IP
2) Check U13 (78M05), L3, D6

• If the led +5V is off:
1) Disconnect TO DISPLAY PCB PAN IP connector; if the led is on check PCB PAN IP
2) Check D4, L2, U12

•If the led +28V is off:
1) Check if the led +320V is on, if it is ok:
1a) Check if U11 is in thermal drift (ATTENTION on the heat dissipator there is dangerous tension!!!!)
1b) Check if U5, U6, U7, U8, U9 are in short-circuit. Switch off the fixture. Remove all the chips from the socket.
Switch on the fixture: if the led is on, insert the chips one by one in the sockets to find out which is in short-circuit.
1c) Check D3
1d) If all the operations described above have not given any positive result, change U11
2) If the led +28V is off together with the led +320V
2a) Check the MAIN POWER INPUT where you can measure the working voltage
2b) Check the main fuse, if it is blown check VR1 (normally it has a resistance = ∞). If it is in short circuit you must change it.
2c) Check D1 (Bridge Rectifier), if it is ok check C65.
2d) If the fuse is still blown, change U11

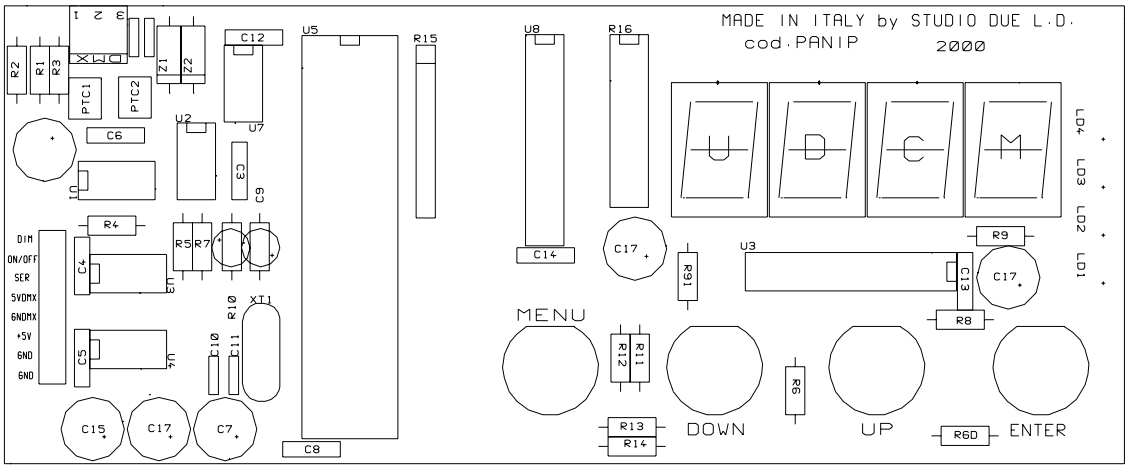

•panip400•

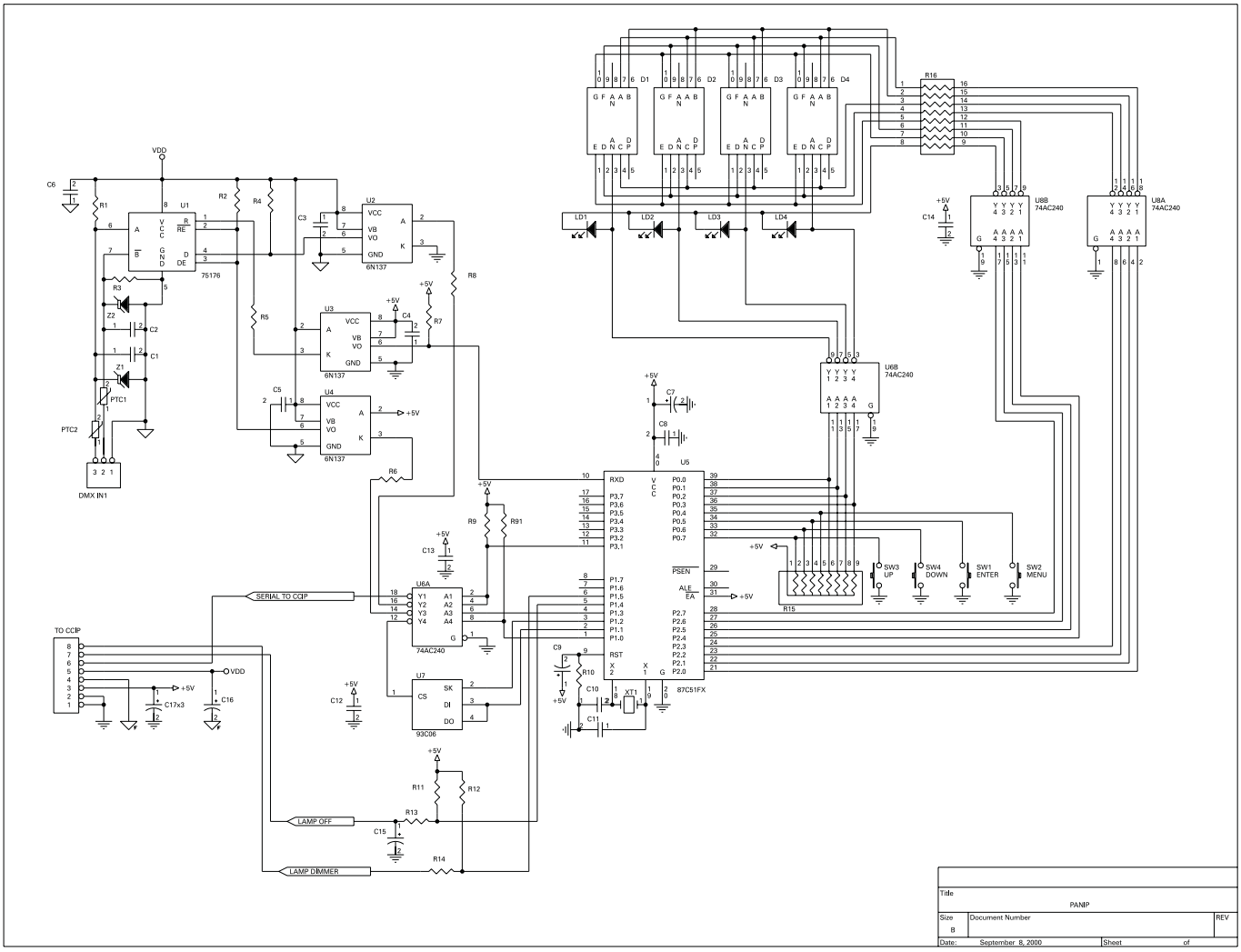

•panipS400•

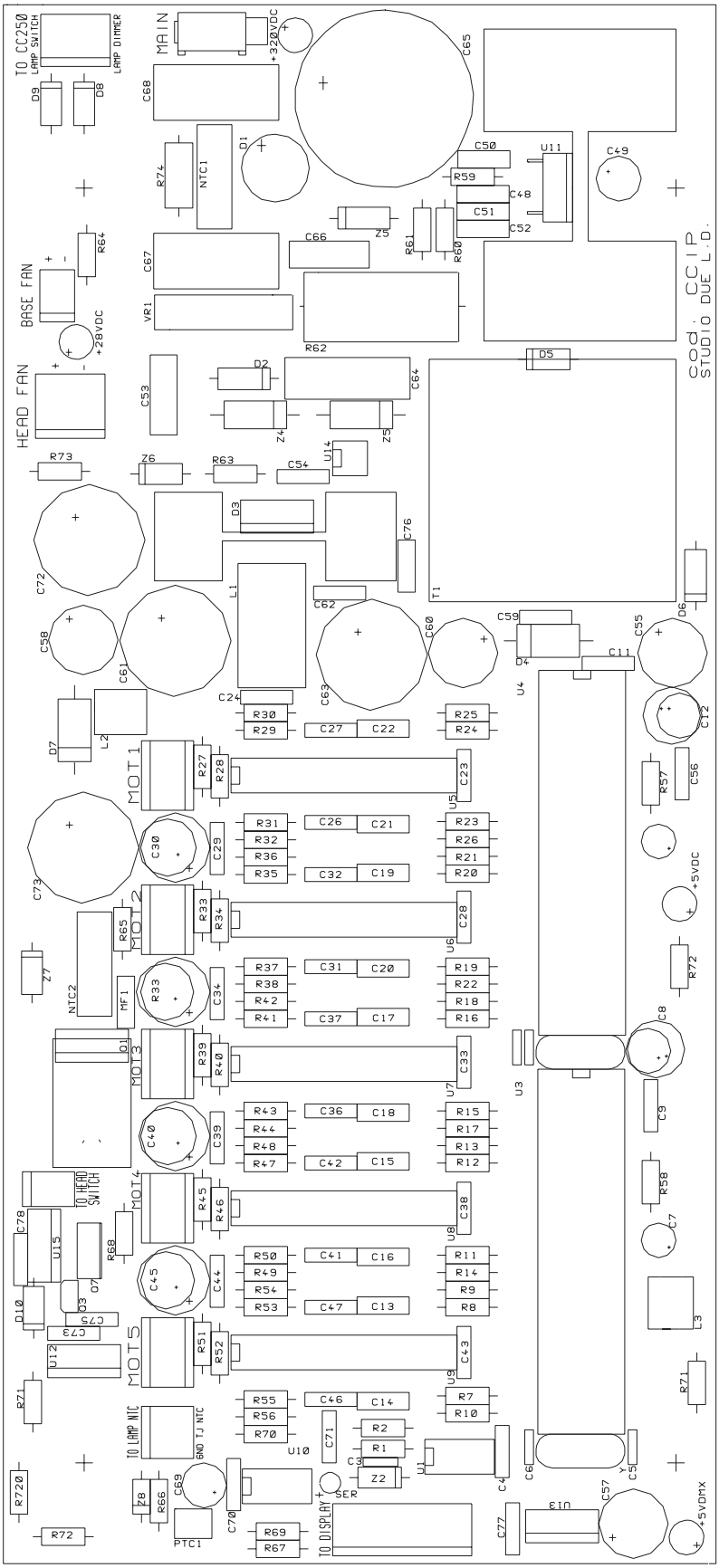
TO CC250
LAMP SWITCH
LAMP DIMMER
MAIN
+320VDC
BASE FAN
+28VDC
HEAD FAN
cod. CCIP
STUDIO DUE L.D.
MOT 1
MOT 2
MOT 3
MOT 4
MOT 5
TO HEAD SWITCH
TO LAMP NTC
GND TJ NTC
TO DISPLAY
SER
+5VDC
+5VDMX

•ccip400•

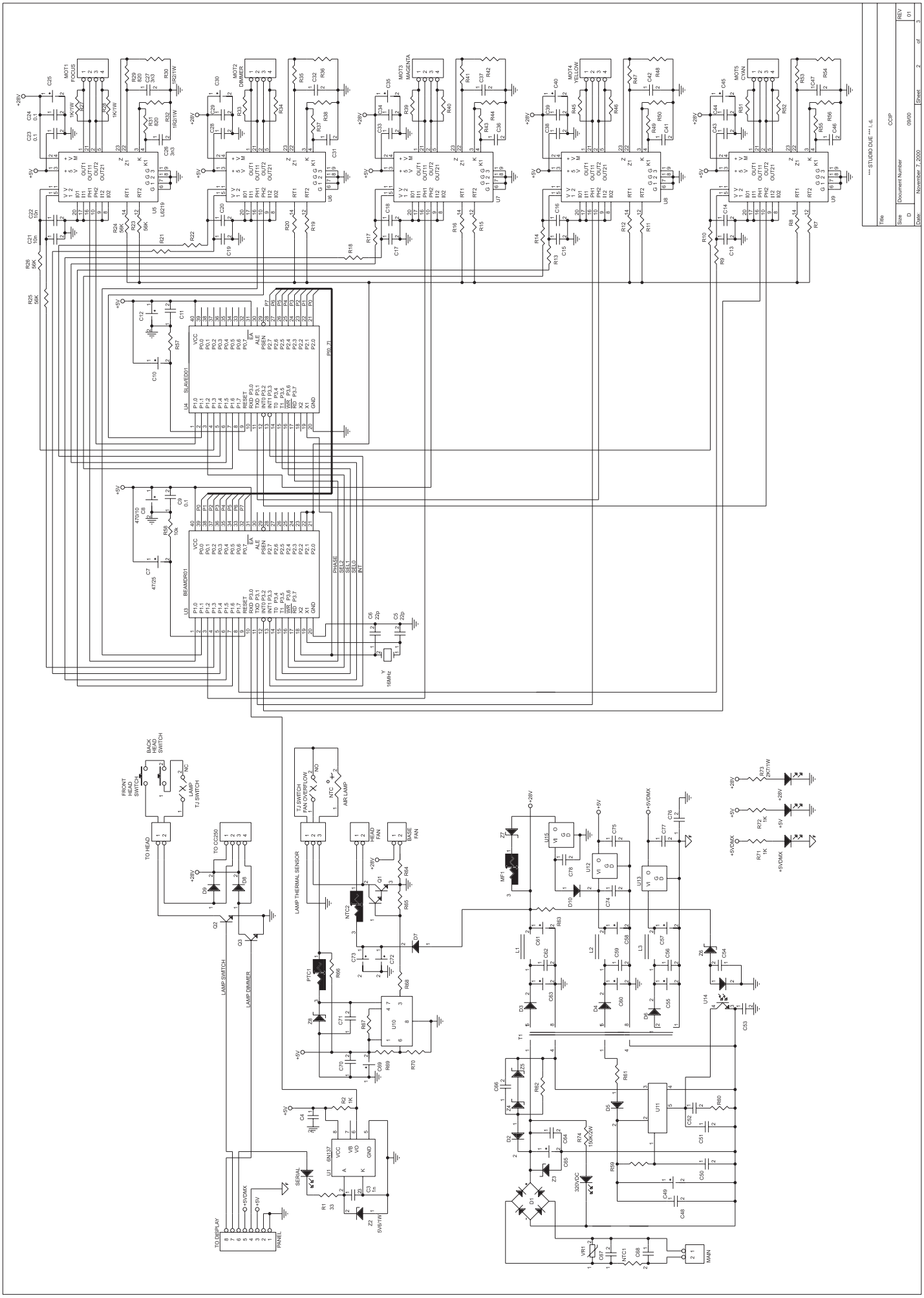
MOT1 FOCUS
MOT2 DIMMER
MOT3 MAGENTA
MOT4 YELLOW
MOT5 CYAN
U5 L6219
U6
U7
U8
U9
U4 SLAVE001
U3 BEAMDR01
Y 16MHz
*** STUDIO DUE ***i.d.
Title
CCIP
Size
Document Number
Rev
01
Date: November, 7, 2000
Sheet 2 of 3
FRONT HEAD SWITCH
BACK HEAD SWITCH
LAMP T.J SWITCH
TO HEAD
TO CC250
LAMP SWITCH
LAMP DIMMER
TJ SWITCH
FAN OVER LOW
AIR LAMP
LAMP THERMAL SENSOR
HEAD FAN
BASE FAN
U1 6N137
SERIAL
TO DISPLAY
PANEL
MAIN

NOTE